INDUSTRIAL RTD - FLANGED WELL

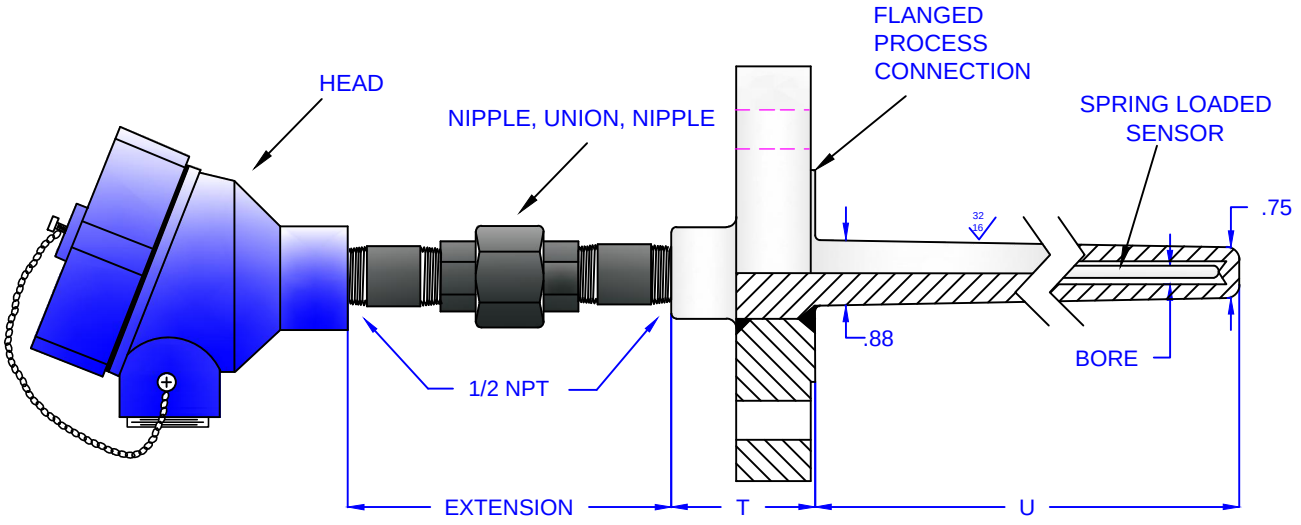

EXAMPLE ORDERING CODE:

IND RTD - AX - 3/4 - 250 - 316 - LT - NUN6 - 25 - 1.5 - 150 - 316 - 2.25 - 4.5

MODEL NUMBER

U LENGTH

T LENGTH (2.25" STD)

HEAD	
AL	STANDARD ALUMINUM
AX	ALUMINUM EXPLOSION PROOF
CI	CAST IRON
SS	STAINLESS STEEL

WELL MATERIAL	
CS	CARBON STEEL
304	304 STAINLESS
316	316 STAINLESS
600	INCONEL 600

CONDUIT THREAD	
1/2	1/2" NPT
3/4	3/4" NPT

FLANGE SIZE AND RATING

PROBE DIAMETER	
125	.125" OD
187	.187" OD
250	.250" OD
312	.312" OD
375	.375" OD

THERMOWELL TYPE	
25	RF FLANGE TAPERED WITH .260 BORE
26	RF FLANGE TAPERED WITH .385 BORE
27	FF FLANGE TAPERED WITH .260 BORE
28	FF FLANGE TAPERED WITH .385 BORE
29	RF FLANGE STRAIGHT WITH .260 BORE
30	RF FLANGE STRAIGHT WITH .385 BORE
31	FF FLANGE STRAIGHT WITH .260 BORE
32	FF FLANGE STRAIGHT WITH .385 BORE
33	RF FLANGE STEPPED WITH .260 BORE
34	RF FLANGE STEPPED WITH .385 BORE
35	FF FLANGE STEPPED WITH .260 BORE
36	FF FLANGE STEPPED WITH .385 BORE

PROBE SHEATH	
304	304 STAINLESS
316	316 STAINLESS

CONSTRUCTION
LT= LOW TEMP
M= MID RANGE
MI= MI CABLE
HI= HI TEMP

EXTENSION - LENGTH		
N	NIPPLE	3"
NUN	NIPPLE, UNION, NIPPLE	6"

PLATINUM RTD ELEMENT: .00385 TRC, 100 OHM @ 0 DEG C
SPECIAL RTD ELEMENTS AVAILABLE UPON REQUEST

LT TEMPERATURE RANGE: -50F TO 500F
M TEMPERATURE RANGE: -50 TO 750F
MI TEMPERATURE RANGE: -290 TO 930F
HT TEMPERATURE RANGE: -290 TO 1,200F